GREE
Change for life

Owner's Manual

Original Instructions

Intelligent Multi-function Gateway

Models:
ME30-24/DF(B)

Thank you for choosing commercial air conditioners. Please read this Owner' s Manual carefully before operation and retain it for future reference.

If you have lost the Owner's Manual,please contact the local agent or visit www.gree.com or send an email to global@gree.com.cn for the electronic version.

GREE ELECTRIC APPLIANCES, INC. OF ZHUHAI

To Users

Thank you for selecting Gree's product. Please read this instruction manual carefully before installing and using the product, so as to master and correctly use the product. In order to guide you to correctly install and use our product and achieve expected operating effect, we hereby instruct as below:

(1) This appliance is not intended for use by persons (including children) with reduced physical, sensory or mental capabilities, or lack of experience and knowledge, unless they have been given supervision or instruction concerning use of the appliance by a person responsibility for their safety. Children should be supervised to ensure that they do not play with the appliance.

(2) In order to ensure reliability of product, the product may consume some power under stand-by status for maintaining normal communication of system and preheating refrigerant and lubricant. If the product is not to be used for long, cut off the power supply; please energize and preheat the unit in advance before reusing it.

(3) Please properly select the model according to actual using environment, otherwise it may impact the using convenience.

(4) This product has gone through strict inspection and operational test before leaving the factory. In order to avoid damage due to improper disassembly and inspection, which may impact the normal operation of unit, please do not disassemble the unit by yourself. You can contact with the special maintenance center of our company if necessary.

(5) For personal injury or property loss and damage caused by improper operation such as improper installation and debugging, unnecessary maintenance, violation of related national laws and rules and industrial standard, and violation of this instruction manual, etc., we will bear no liability.

(6) When the product is faulted and cannot be operated, please contact with our maintenance center as soon as possible by providing the following information.

1) Contents of nameplate of product (model, cooling/heating capacity, product No., ex-factory date).

2) Malfunction status (specify the situations before and after the error occurs).

(7) All the illustrations and information in the instruction manual are only for reference. In order to make the product better, we will continuously conduct improvement and innovation. We have the right to make necessary revision to the product from time to time due to the reason of sales or production, and reserve the right to revise the contents without further notice.

(8) The final right to interpret for this instruction manual belongs to Gree Electric Appliances Inc. of Zhuhai.

Contents

1 Safety Notices

Warning: If not abide strictly, it may cause severe damage to the unit or the people.

Note: If not abide strictly, it may cause slight or medium damage to the unit or the people.

This sign indicates that the operation must be prohibited. Improper operation may cause severe damage or death to people.

This sign indicates that the items must be observed. Improper operation may cause damage to people or property.

WARNING!

This product can't be installed at corrosive , inflammable or explosive environment or the place with special requirements, such as kitchen. Otherwise, it will affect the normal operation or shorten the service life of the unit, or even cause fire hazard or serious injury. As for above special places, please adopt special air conditioner with anti-corrosive or anti-explosion function .

2 User Notices

Dear users，

Before installing or using this appliance, please read this instruction manual carefully, and install or use according to the steps stipulated in the instruction manual.

Meaning of the following marks should be specially noted:

Warning!	It means misoperation may cause death or severe damage to people.
Caution!	It means misoperation may damage the unit.

Warning!
(1) It must be installed by professional personnel, otherwise it may cause fire or electric shock.
(2) The plug of power cord should be inserted after ensuring that it is dry and clean.
(3) Before touching the electric components of unit, please make sure that this appliance is power-off.
(4) Please do not touch this appliance with wet hands, otherwise it may cause

electric shock.
(5) Please use the power cord with designated specification, otherwise it may cause poor contact or fire hazard.
(6) If the power cord is reversely connected or the input power is out of the allowable range, it may cause fire and damage the appliance.
(7) For the equipment with power plug, the power socket should be installed near the equipment for easy use.
(8) Please install this appliance in the electric control cabinet indoors that with lock or is out of reach.
(9) Please install this appliance in a location without interference of electromagnetic wave or dust.
Caution!
(1) Make sure that the specification of input power is matched, otherwise this appliance cannot normally work or even be damaged.
(2) Make sure that appliance is installed in a correct position, otherwise it may cause communication error.
(3) Make sure that the communication wire is connected into correct interface, otherwise it may cause communication error.
(4) After connecting the wires, wrap with insulated adhesive tape to prevent oxidation or short circuit.
(5) If it is replaced with incorrect batteries, there is a risk of explosion, please dispose the waste batteries according to the instructions.
(6) Normal working conditions for Intelligent Multi-function Gateway: ①Temperature: -20～+60℃; ②Humidity≤85%; ③It should be installed indoors (it is recommended to install inside the electric control cabinet) to avoid direct sunlight, rain or snow.
(7) All the pictures in the instruction manual are only for reference.

3 Functions and Parameters

3.1 Summarization of Functions

Intelligent Multi-function Gateway (Model: ME30-24/DF(B)) is used together with Intelligent Remote Eudemon system, which can realize the supervision and control of multi VRF systems. Using method for Intelligent Remote Eudemon system please see the instruction manual of such software. Intelligent Multi-function Gateway has integrated the standard BACnet/IP building interface, supporting the data interchange between air conditioners and BMS system, providing 10 I/O interfaces (5 input interfaces: DI1, DI2, DI3, DI4, DI5; 5 output interfaces: DO1, DO2, DO3, DO4, DO5), in which DI1 has been defined as fire alarm signal interface, status of other I/O interfaces can be reflected to specific object in the BACnet/IP bus,

which can be self-defined by user.

The gateway is applicable to GMV5S all DC inverter multi VRF unit, GMV5 DC inverter multi VRF unit, GMV water source heat pump DC inverter multi VRF unit, GMV ES DC inverter multi VRF unit, GMV Tops residential multi VRF unit, GMV Star residential multi VRF unit.

3.2 Instruction of Parameters

3.2.1 Gateway Default TCP/IP Parameters

IP address: 192.168.1.150;

Subnet mask: 255.255.255.0;

Default gateway: 192.168.1.1.

Caution! After altering the TCP/IP parameters, please re-energize the gateway, through which can the revised parameters become valid.

3.2.2 Gateway Building Interface Parameters

Parmeters that support air conditioner and different equipment please refer to Attachment B: Parameters for Air Conditioner (BACnet protocol version V1.0.0).

4 Integral Components

This appliance includes the following fittings. Please check before installation.

Intelligent Multi-function Gateway	1 set
Instruction Manual	1 pcs

5 Detailed Introduction to Gateway

5.1 Interface

5.1.1 Sketch Map for Functions of Interface

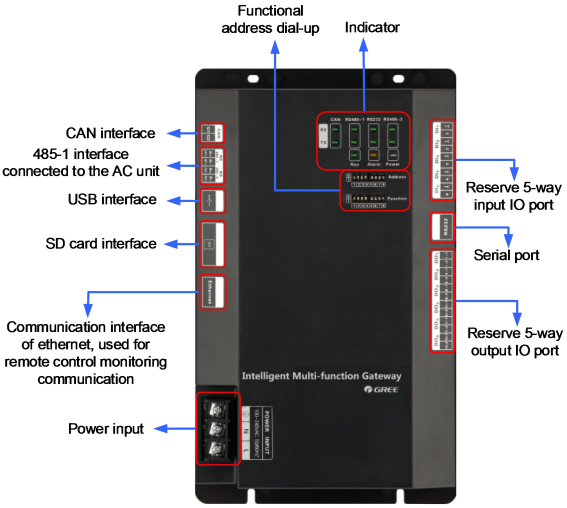

5.1.2 Power Supply

Power input is 100VAC-240VAC, 50/60Hz.

Warning! Power input must be grounded, otherwise there may be a risk; moreover, when the gateway is energized, please do not touch the power input interface of it.

Caution! The power cord should be fixed with the wire clamp inside the fittings.

5.1.3 Communication Interface

CAN communication interface: connect to air conditioner via 2-core communication wire to achieve communication between gateway and the air conditioner which adopts CAN protocol.

RS485-1 communication interface: this communication interface is not available to this appliance yet.

RS485-2 communication interface: this communication interface is not available to this appliance yet.

Interface of USB and SD card: this communication interface is not available to this appliance yet.

Ethernet interface: communicate with Intelligent Remote Eudemon system or BMS system via netting twine.

5.1.4 DI/DO Digital Quantity Input/Output

At present, this gateway supports 5 DI (digital input), 5 DO (digital output), and DO6 is reserved.

DI1…DI5 digital input 0/1 digital signal (binary system), applicable to active input.

DI 1: when in CAN2 network, fire alarm signal, “1” connects to 12V power supply, then DI 1 interface input fire alarm signal is “1”, the gateway will send control command to make all the outdoor units stop

operation; when “1” connects to nothing, the DI 1 interface input signal is “0”, then all the outdoor units resume to operate.

When in CAN1 network, fire alarm signal, “1” connects to 12V power supply, then DI 1 interface input fire alarm signal is “1”, the gateway will send control command to make all the indoor units stop operation; when “1” connects to nothing, the DI 1 interface input signal is “0”, the indoor unit should be manually adjusted to resume to operate.

DI 2…DI 5: for user to self-define.

DO1…DO5 digital output Relay output, normally open contact

Maximum electric capacity: 250VAC, 3A; 30VDC, 3A

Example: input “1” in the DO 5 position of BACnet protocol, then two contacts of DO 5 relay are closed; input “0” in the DO 5 position of BACnet protocol, then two contacts of DO 5 relay are disconnected.

5.2 LED Display

The LED indicators in the above picture are mainly devided into two parts: indicator of status (operation, alarm, power) and indicator of communication (CAN, RS485, RS2332). Working status for the indicators are shown in the following list.

CAN	RX	When receiving the data from the equipment connected to gateway (such as air conditioner), it
CAN	TX	When sending data to the equipment connected to gateway (such as air conditioner), it flashes.

RS485-1	RX	This LED is not available to this appliance.
RS485-1	TX	This LED is not available to this appliance.
RS232	RX	This LED is not available to this appliance.
RS232	TX	This LED is not available to this appliance.
RS485-2	RX	This LED is not available to this appliance.
RS485-2	TX	This LED is not available to this appliance.
Power		When the power supply is normal for gatway, indicator is constantly on.
Operation		When the gateway is normally operating, indicator is flashing.
Alarm		This LED is not available to this appliance.

5.3 Dial Code

Caution! Before using this appliance, please set the dial code for it, otherwise it cannot operate normally!

Setting area for dial code of gateway consists of dialer and functional dialer.

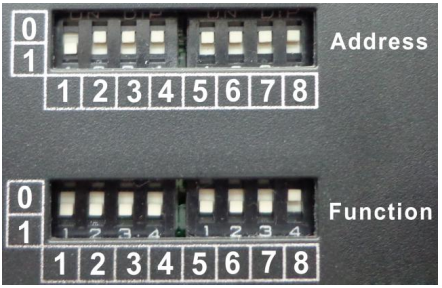

5.3.1 Sketch Map of Dialer

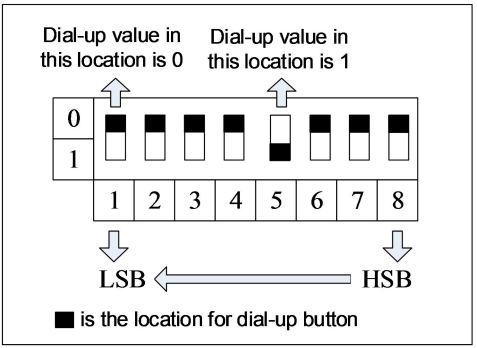

5.3.2 Address Dialer——set the address for equipment

The address dialer is for setting the equipment address of Intelligent Multi-function Gateway.

Caution! Before using this gateway, it requires to set the address dialer of gateway, and the dial code address should not repeat in the same system network, otherwise it may cause communication error.

Address setting range for Intelligent Multi-function Gateway: 0~254. For specific dial code please refer to dial code address attachment A: Dial Code Address.

Example for setting address:

Setting method for address 11 is shown as below:

Address								value
1	2	3	4	5	6	7	8	
1	1	0	1	0	0	0	0	11

Address DIP form

Setting method for address 43 is shown as below:

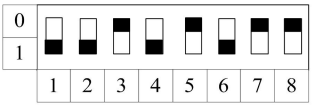

Address								value
1	2	3	4	5	6	7	8	
1	1	0	1	0	1	0	0	43

Address DIP form

5.3.3 8 Digits for Address Dial Code——setting for gateway to resume to default collocation

When the IP address, subnet mask, default gateway, equipment name and equipment ID, etc. of Intelligent Multi-function Gateway are wrongly collocated by webpage and make the webpage be unable to access, please dial all the 8 address codes to 1, after all the indicators flash except the power indicator, resume to dial code and restart the gateway, then the default setting is resumed.

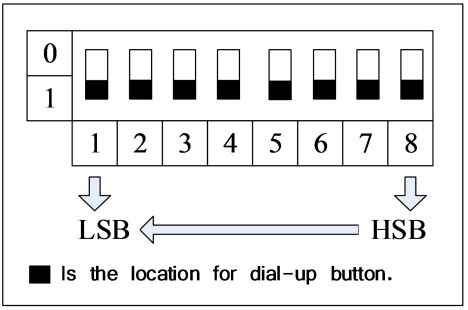

5.3.4 The 8th digit of functional dial code——setting of CAN bus matched resistance

Caution! The gateway in the end system of CAN bus must be set to be with matched resistance, otherwise it cannot conduct normal communication.

CAN bus: for specific meaning please refer to instruction of network topology diagram.

The 8th button of functional dialer is for setting the matched resistance in CAN bus.

When the gateway is in the end of CAN bus, the gateway should be set as with matched resistance, please dial the 8th digit of dialer as 0;

When the gateway is not in the end of CAN bus, the gateway should be set as without matched resistance, please dial the 8th digit of dialer as 1.

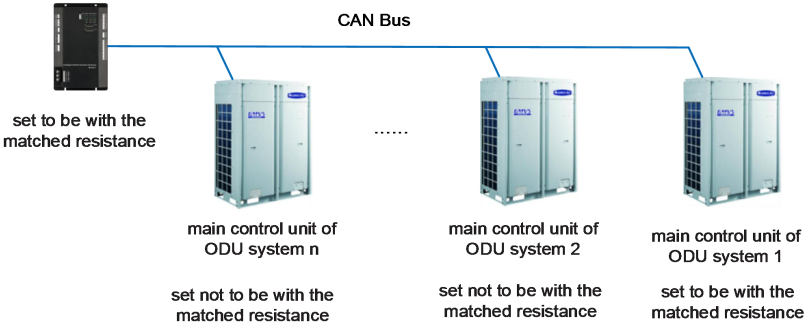

n is the quantity of outdoor unit system, n≤16.

Sketch map for dial code setting of matched resistance.

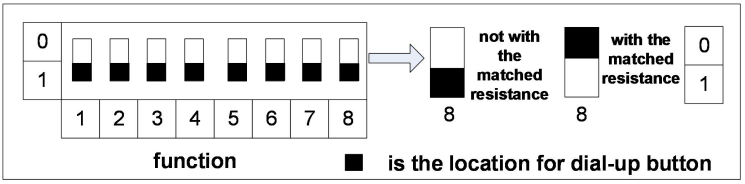

6 Applicable Location

Applicable location for Intelligent Multi-function Gateway is generally building management system and Intelligent Remote Eudemon system.

6.1 Long-distance Monitor System

When Intelligent Remote Eudemon system is adopted, this gateway is used for connecting into Intelligent Remote Eudemon system to realize monitor and control for multi VRF unit via Intelligent Remote Eudemon system. Intelligent Remote Eudemon system connect to Intelligent Multi-function Gateway through Ethernet, one Intelligent Remote Eudemon can connect to 16 Intelligent Multi-function Gateways at most.

6.2 Building Management System (BMS)

This gateway adopts standard BACnet/IP protocol interface for user to connect to building management system, to realize the monitor of multi VRF unit via building management system.

6.3 Network Topology Diagram

Instruction of Network Topology Diagram:

CAN2 bus network: the L2 in the diagram is CAN2 bus, consisting of Intelligent Multi-function Gateway and master control outdoor unit of system. One CAN2 network can connect to 16 sets of systems or 255 sets of indoor units at most.

CAN1 bus network: the L3 in the diagram is CAN1 bus, consisting of Intelligent Multi-function Gateway and all the indoor units and outdoor units of the system. One CAN1 network can connect to 80 sets of indoor units at most.

System: one system consists of one set of outdoor units (one set of outdoor unit is a module set, can consist 1~4 modules, that is, 1~4 sets of outdoor units) and its indoor units.

Quantity of units can be connected to Intelligent Multi-function Gateway: one

Intelligent Multi-function Gateway supports one CAN2 network, can connect to 16 sets of systems or 255 sets of indoor units.

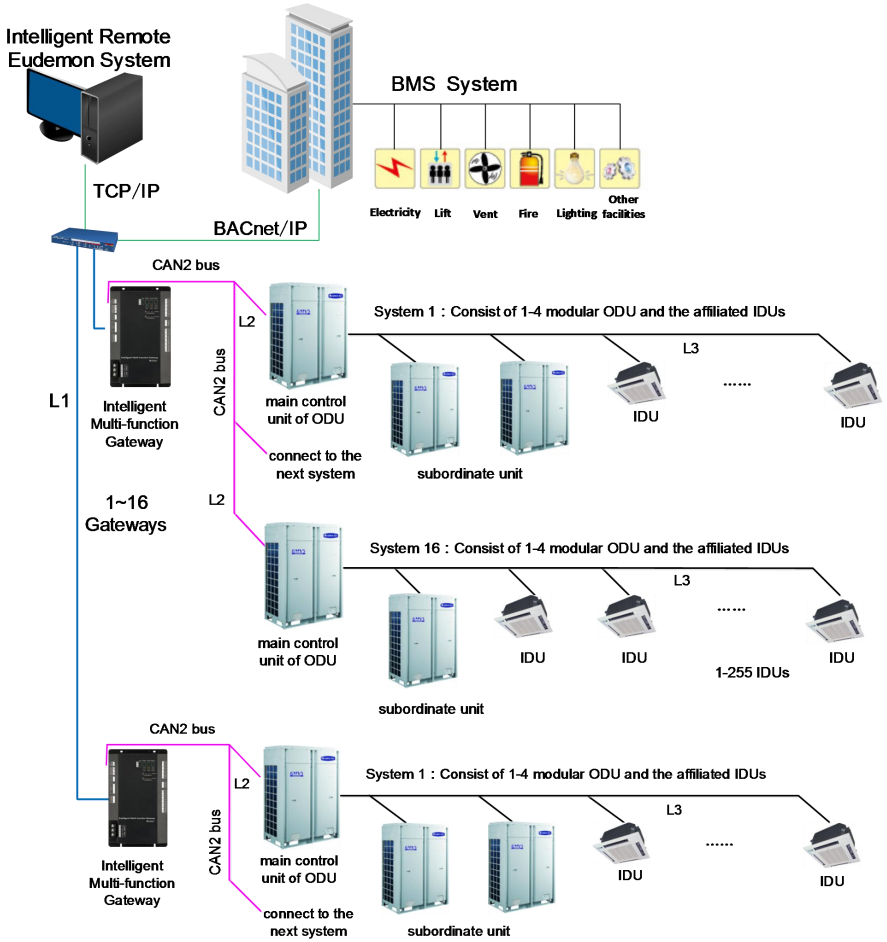

Note: L1 in the diagram is standard netting twine, L2 and L3 are twisted-pairs.

7 Product Installation

7.1 Product Dimension and Installing Space Dimension of Electric Control Cabinet

7.1.1 Product Dimension

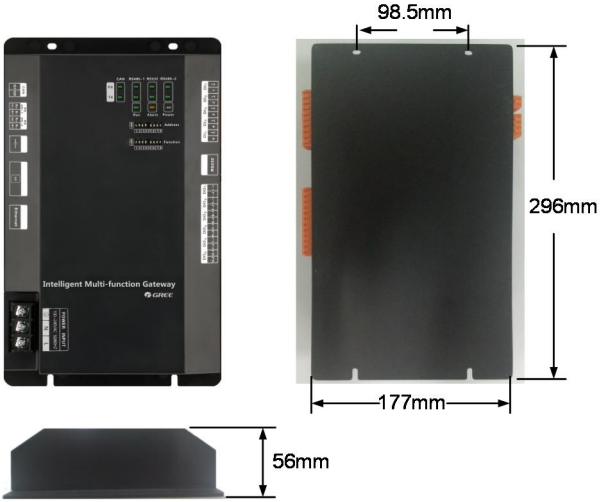

L×W×H: 296×177×56(MM)

7.1.2 Installing Space Dimension of Electric Control Cabinet

Intelligent Multi-function Gateway should be installed inside the electric control cabinet, the gateway is hanged vertically and use 4 screws to fix it. The needed space is shown as below (only for reference).

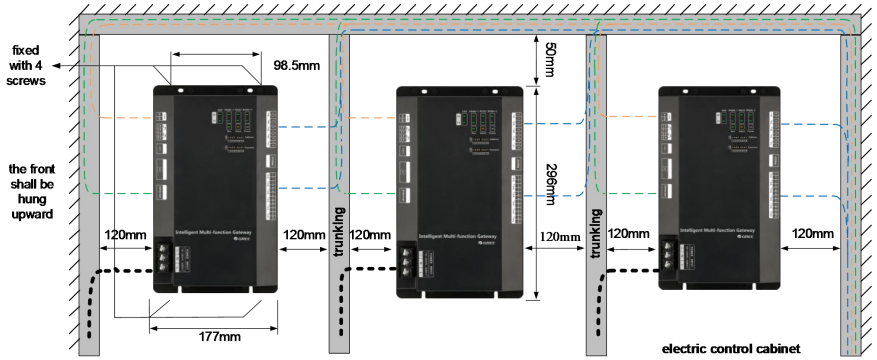

Warning! Power cord and communication wire of Intelligent Multi-function Gateway must be arranged separately (distance is over 15cm), otherwise it may cause communication error of Intelligent Multi-function Gateway.

The broken line shown in the picture is communication wire, and bold broken line is heavy current wire. The wiring route arranged in the picture is only for reference.

7.2 Communication Connection

Communication system of Intelligent Multi-function Gateway includes:

(1) Communication between Intelligent Multi-function Gateway and Intelligent Remote Eudemon system/BMS system;

(2) Communication between Intelligent Multi-function Gateway and air conditioners.

7.2.1 Selection of Communication Wire Material

(1) Communication wire for Intelligent Multi-function Gateway and Intelligent Remote Eudemon system/BMS system uses standard Ethernet communication wire, length of netting twine between gateway and Router (computer, switching equipment, etc.) should not be over 80m;

(2) Model selection for communication wire between Intelligent Multi-function Gateway and air conditioner.

Type of Material	Communication wire between gateway and air codnitioner L (m)	Wire diameter (mm^2)	Material standard	Remark
Light/general chloroethylene jacket twist-pair copper wire (RVV)	L≤500	≥2×0.75	IEC60227-5:2007	Total length of communication wire should not be over 500m

7.2.2 Connecting Method of Communication Wire

(1) Communication Connection between Intelligent Multi-function Gateway and Intelligent Remote Eudemon system/BMS system;

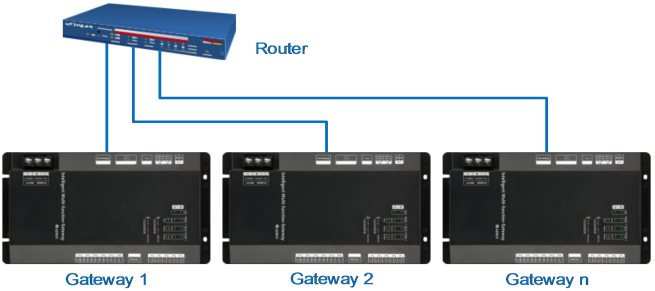

(2) Communication connection between Intelligent Multi-function Gateway and air conditioner (n refers to the quantity of outdoor unit, n≤ 16);

Caution! All the communication wires under Intelligent Multi-function Gateway must adopt series connection, star connection is not allowed.

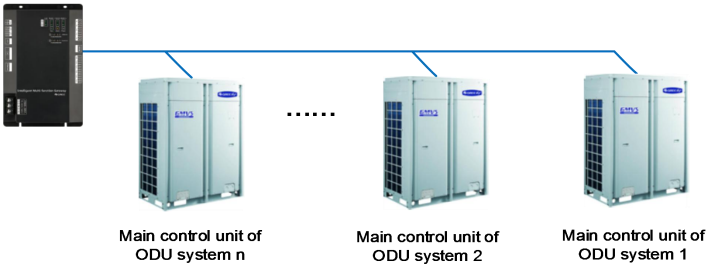

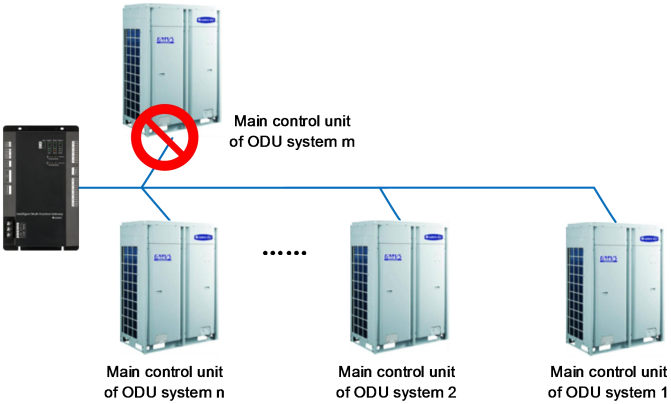

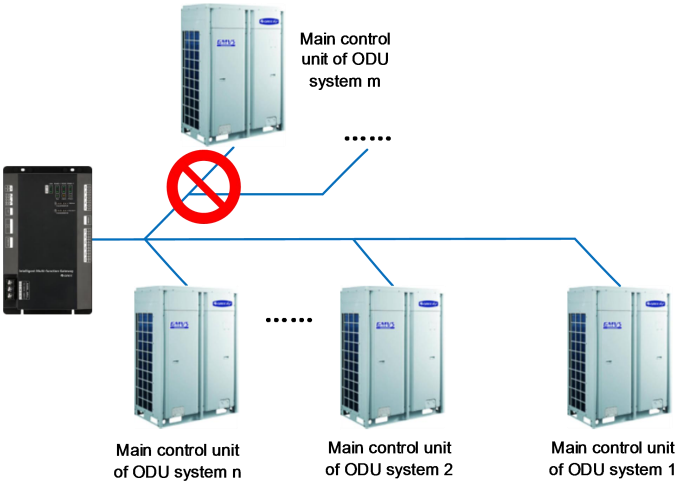

7.2.3 Configuration of Communication Connection

(1) Connection of communication wire between gateway and PC:

Sketch map for connection between Intelligent Multi-function Gateway and user end of PC:

1) Adopt crossed (or parallel) netting twine, Intelligent Multi-function Gateway is directly connected to PC.

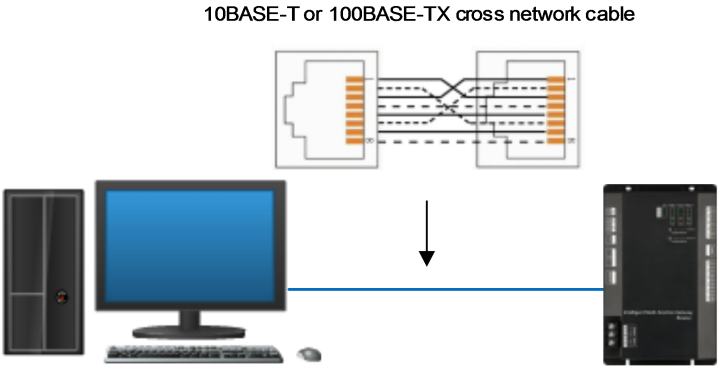

2) Adopt parallel (or crossed) netting twein, Intelligent Multi-function Gateway is connected to PC via Router.

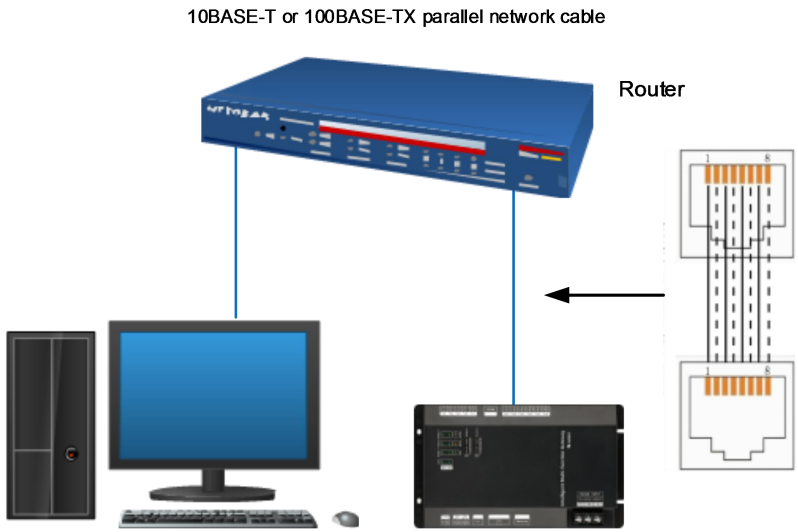

3) Connection of communication wire between Intelligent Multi-function Gateway and air conditioner:

When the gateway connects to master control outdoor unit, it must connect to the outdoor unit with the last address.

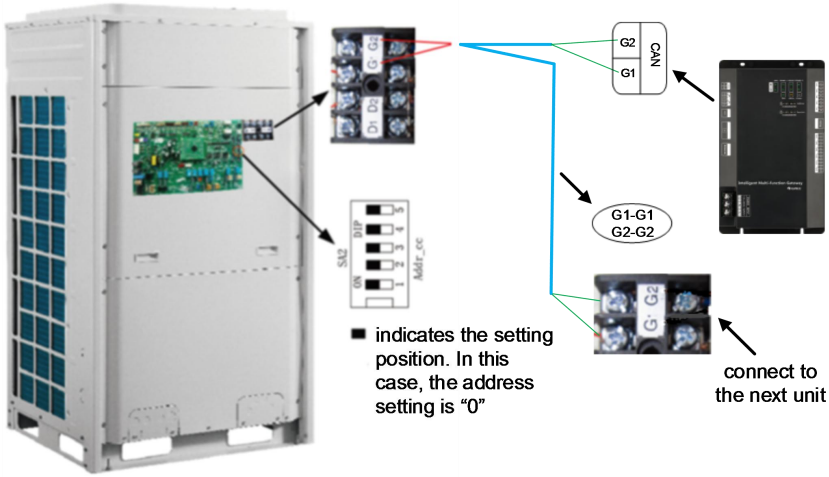

(2) Configuration of Intelligent Multi-function Gateway:

One Intelligent Multi-function Gateway can connect to 16 sets of systems and 255 indoor units simultaneously. After installation, parameters of gateway should be collocated. Before collocating the parameters of gateway, please set the IP address

of PC as the same network segment of IP address of Intelligent Multi-function Gateway, please refer to attachment C; open the browser (IE10 or above, Firefox or Google), input the default IP address of gateway in the address column: http://192.168.1.150, default user name: config, password: config; as shown below.

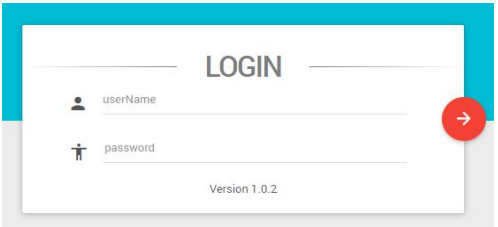

After inputting the user name and password, click the arrow to enter into setting interface.

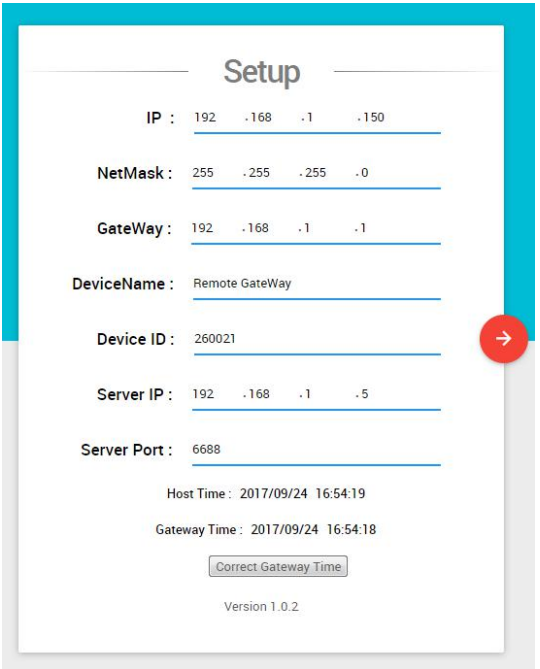

Parameters for setting: gateway IP, net mask, default gateway, device name, device ID, server IP and server port. User can set according to actual engineering situation. After the setting is done, click the arrow and restart the gateway, then the setting will come into effect.

8 BACnet Protocol

8.1 System Outline of BACnet Protocol

BACnet standard protocol system framework is a 4-layer system structure simplified from OSI 7-layer system structure by SPC according to the feature of building self-control system. The four layers are corresponding to the application layer, network layer, data link and physical layer in the OSI model. BACnet standard protocol has defined its own application layer and network layer, and has provided 5 solutions as below for its data link layer and physical layer.

<table>
<tr><th colspan="6">BACnet protocol layers</th><th>Corresponding OSI layers</th></tr>
<tr><td colspan="6">BACnet application layer</td><td>Application layer</td></tr>
<tr><td colspan="6">BACnet network layer</td><td>Network layer</td></tr>
<tr><td colspan="2">ISO8802-2(IEEE802.2)</td><td colspan="2">MS/TP</td><td>PTP</td><td rowspan="2">LonTalk</td><td>Data link</td></tr>
<tr><td>ISO8802-3 (IEEE802.3)</td><td>ARCNET</td><td>EIA-485 (RS485)</td><td>EIA-232 (RS232)</td><td colspan="2">Physical layer</td></tr>
</table>

8.2 Object and its Property of BACnet Protocol

8.2.1 Definition of BACnet Object

BACnet has defined a set of object with property to represent any function of building self-control equipment, so as to provide a kind of standard method for representing building self-control equipment. Such gateway BACnet has defined 9 objects, the serial number, name and application example for these objects are shown as below.

No.	Object Name	Application Example
0	Analog Input	Input of sensor
1	Analog Output	Control of output
2	Analog Value	set the threshold value or parameters of other analog control systems
3	Binary Input	Input of switch
4	Binary Output	Output of relay

5	Binary Value	Digital control system parameter
13	Multi-state Input	It refers to the status of multimode processing program, such as ON/OFF of refrigerator and defrosting circulation, etc.
14	Multi-state Output	It refers to an anticipating status of multimode processing program, such as the time for refrigerator to start to cool down.
19	Multi-state Value	It refers to the parameter of multimode processing program, such as fan speed setting, mode setting, etc. of air conditioner.

Each object is with a set of property, the value of property describes the feature and function of the object.

8.2.2 Table of BACnet Protocol Point

One BACnet object ID consists of the following 5 parts:

BACnet Object ID (32bits)				
10 bits	3 bits	2 bits	9 bits	8 bits
Type of object (T)	Series of model (0,1,2) (M)	Type of equipment （01,02,03）（D）	Deflection of equipment (N)	Parameter number (P)

Type of object: it means the type of BACnet object, such as AI, BO, etc., in which T refers to the enumerative serial number of object AI, BO;

Series of model: including multi VRF unit (0), residential split type unit (1), U-Match series (2) …

Type of equipment: including the gateway (0), indoor unit (1), outdoor unit (2), others (3) (IO module);

Deflection of equipment: in the indoor unit object, it refers to the indoor unit number;

Parameter number: serial number of parameter after data switchover;

BACnet object ID value is:

BACnet ID = P+N*256+D*256*512+M*256*512*4+T*256*512*32；

Such as the indoor ambient temperature of the object (IndoorUnitAmbientTemp_01_01_01), the BACnet object ID is AI(0)+512*256+XX*256+1=0+01*512*256+01*256+1=131329, the meaning is as below:

BACnet Object ID (32bits)				
10 bits	3 bits	2 bits	9 bits	8 bits
Type of object (T)	Series of model (designate as 0) (M)	Type of equipment（01,02,03）（D）	Deflection of equipment (N)	Parameter number (P)
0：AI	0: multi VRF unit	1: indoor unit	1	1

If the value of initial indoor unit engineering number object (FirstIndoorUnitNum_01_00_00，object ID is 1) of the Intelligent Multi-function Gateway is M, then IndoorUnitAmbientTemp_01_01_01（131329） represents the parameter of indoor unit with the indoor unit number of (M+1).

Attachment A Dial Code Address

0~31 DIP address table										32~63 DIP address table								
1	**2**	**3**	**4**	**5**	**6**	**7**	**8**	**addr**		**1**	**2**	**3**	**4**	**5**	**6**	**7**	**8**	**addr**
0	0	0	0	0	0	0	0	0		0	0	0	0	0	1	0	0	32
1	0	0	0	0	0	0	0	1		1	0	0	0	0	1	0	0	33
0	1	0	0	0	0	0	0	2		0	1	0	0	0	1	0	0	34
1	1	0	0	0	0	0	0	3		1	1	0	0	0	1	0	0	35
0	0	1	0	0	0	0	0	4		0	0	1	0	0	1	0	0	36
1	0	1	0	0	0	0	0	5		1	0	1	0	0	1	0	0	37
0	1	1	0	0	0	0	0	6		0	1	1	0	0	1	0	0	38
1	1	1	0	0	0	0	0	7		1	1	1	0	0	1	0	0	39
0	0	0	1	0	0	0	0	8		0	0	0	1	0	1	0	0	40
1	0	0	1	0	0	0	0	9		1	0	0	1	0	1	0	0	41
0	1	0	1	0	0	0	0	10		0	1	0	1	0	1	0	0	42
1	1	0	1	0	0	0	0	11		1	1	0	1	0	1	0	0	43
0	0	1	1	0	0	0	0	12		0	0	1	1	0	1	0	0	44
1	0	1	1	0	0	0	0	13		1	0	1	1	0	1	0	0	45
0	1	1	1	0	0	0	0	14		0	1	1	1	0	1	0	0	46
1	1	1	1	0	0	0	0	15		1	1	1	1	0	1	0	0	47
0	0	0	0	1	0	0	0	16		0	0	0	0	1	1	0	0	48
1	0	0	0	1	0	0	0	17		1	0	0	0	1	1	0	0	49
0	1	0	0	1	0	0	0	18		0	1	0	0	1	1	0	0	50
1	1	0	0	1	0	0	0	19		1	1	0	0	1	1	0	0	51
0	0	1	0	1	0	0	0	20		0	0	1	0	1	1	0	0	52
1	0	1	0	1	0	0	0	21		1	0	1	0	1	1	0	0	53
0	1	1	0	1	0	0	0	22		0	1	1	0	1	1	0	0	54
1	1	1	0	1	0	0	0	23		1	1	1	0	1	1	0	0	55
0	0	0	1	1	0	0	0	24		0	0	0	1	1	1	0	0	56
1	0	0	1	1	0	0	0	25		1	0	0	1	1	1	0	0	57
0	1	0	1	1	0	0	0	26		0	1	0	1	1	1	0	0	58
1	1	0	1	1	0	0	0	27		1	1	0	1	1	1	0	0	59
0	0	1	1	1	0	0	0	28		0	0	1	1	1	1	0	0	60
1	0	1	1	1	0	0	0	29		1	0	1	1	1	1	0	0	61
0	1	1	1	1	0	0	0	30		0	1	1	1	1	1	0	0	62
1	1	1	1	1	0	0	0	31		1	1	1	1	1	1	0	0	63

64~95 DIP address table								
1	**2**	**3**	**4**	**5**	**6**	**7**	**8**	**addr**
0	0	0	0	0	0	1	0	64
1	0	0	0	0	0	1	0	65
0	1	0	0	0	0	1	0	66
1	1	0	0	0	0	1	0	67
0	0	1	0	0	0	1	0	68
1	0	1	0	0	0	1	0	69
0	1	1	0	0	0	1	0	70
1	1	1	0	0	0	1	0	71
0	0	0	1	0	0	1	0	72
1	0	0	1	0	0	1	0	73
0	1	0	1	0	0	1	0	74
1	1	0	1	0	0	1	0	75
0	0	1	1	0	0	1	0	76
1	0	1	1	0	0	1	0	77
0	1	1	1	0	0	1	0	78
1	1	1	1	0	0	1	0	79
0	0	0	0	1	0	1	0	80
1	0	0	0	1	0	1	0	81
0	1	0	0	1	0	1	0	82
1	1	0	0	1	0	1	0	83
0	0	1	0	1	0	1	0	84
1	0	1	0	1	0	1	0	85
0	1	1	0	1	0	1	0	86
1	1	1	0	1	0	1	0	87
0	0	0	1	1	0	1	0	88
1	0	0	1	1	0	1	0	89
0	1	0	1	1	0	1	0	90
1	1	0	1	1	0	1	0	91
0	0	1	1	1	0	1	0	92
1	0	1	1	1	0	1	0	93
0	1	1	1	1	0	1	0	94
1	1	1	1	1	0	1	0	95

96~127 DIP address table								
1	**2**	**3**	**4**	**5**	**6**	**7**	**8**	**addr**
0	0	0	0	0	1	1	0	96
1	0	0	0	0	1	1	0	97
0	1	0	0	0	1	1	0	98
1	1	0	0	0	1	1	0	99
0	0	1	0	0	1	1	0	100
1	0	1	0	0	1	1	0	101
0	1	1	0	0	1	1	0	102
1	1	1	0	0	1	1	0	103
0	0	0	1	0	1	1	0	104
1	0	0	1	0	1	1	0	105
0	1	0	1	0	1	1	0	106
1	1	0	1	0	1	1	0	107
0	0	1	1	0	1	1	0	108
1	0	1	1	0	1	1	0	109
0	1	1	1	0	1	1	0	110
1	1	1	1	0	1	1	0	111
0	0	0	0	1	1	1	0	112
1	0	0	0	1	1	1	0	113
0	1	0	0	1	1	1	0	114
1	1	0	0	1	1	1	0	115
0	0	1	0	1	1	1	0	116
1	0	1	0	1	1	1	0	117
0	1	1	0	1	1	1	0	118
1	1	1	0	1	1	1	0	119
0	0	0	1	1	1	1	0	120
1	0	0	1	1	1	1	0	121
0	1	0	1	1	1	1	0	122
1	1	0	1	1	1	1	0	123
0	0	1	1	1	1	1	0	124
1	0	1	1	1	1	1	0	125
0	1	1	1	1	1	1	0	126
1	1	1	1	1	1	1	0	127

128~159 DIP address table								
1	**2**	**3**	**4**	**5**	**6**	**7**	**8**	**addr**
0	0	0	0	0	0	0	1	128
1	0	0	0	0	0	0	1	129
0	1	0	0	0	0	0	1	130
1	1	0	0	0	0	0	1	131
0	0	1	0	0	0	0	1	132
1	0	1	0	0	0	0	1	133
0	1	1	0	0	0	0	1	134
1	1	1	0	0	0	0	1	135
0	0	0	1	0	0	0	1	136
1	0	0	1	0	0	0	1	137
0	1	0	1	0	0	0	1	138
1	1	0	1	0	0	0	1	139
0	0	1	1	0	0	0	1	140
1	0	1	1	0	0	0	1	141
0	1	1	1	0	0	0	1	142
1	1	1	1	0	0	0	1	143
0	0	0	0	1	0	0	1	144
1	0	0	0	1	0	0	1	145
0	1	0	0	1	0	0	1	146
1	1	0	0	1	0	0	1	147
0	0	1	0	1	0	0	1	148
1	0	1	0	1	0	0	1	149
0	1	1	0	1	0	0	1	150
1	1	1	0	1	0	0	1	151
0	0	0	1	1	0	0	1	152
1	0	0	1	1	0	0	1	153
0	1	0	1	1	0	0	1	154
1	1	0	1	1	0	0	1	155
0	0	1	1	1	0	0	1	156
1	0	1	1	1	0	0	1	157
0	1	1	1	1	0	0	1	158
1	1	1	1	1	0	0	1	159

160~191 DIP address table								
1	**2**	**3**	**4**	**5**	**6**	**7**	**8**	**addr**
0	0	0	0	0	1	0	1	160
1	0	0	0	0	1	0	1	161
0	1	0	0	0	1	0	1	162
1	1	0	0	0	1	0	1	163
0	0	1	0	0	1	0	1	164
1	0	1	0	0	1	0	1	165
0	1	1	0	0	1	0	1	166
1	1	1	0	0	1	0	1	167
0	0	0	1	0	1	0	1	168
1	0	0	1	0	1	0	1	169
0	1	0	1	0	1	0	1	170
1	1	0	1	0	1	0	1	171
0	0	1	1	0	1	0	1	172
1	0	1	1	0	1	0	1	173
0	1	1	1	0	1	0	1	174
1	1	1	1	0	1	0	1	175
0	0	0	0	1	1	0	1	176
1	0	0	0	1	1	0	1	177
0	1	0	0	1	1	0	1	178
1	1	0	0	1	1	0	1	179
0	0	1	0	1	1	0	1	180
1	0	1	0	1	1	0	1	181
0	1	1	0	1	1	0	1	182
1	1	1	0	1	1	0	1	183
0	0	0	1	1	1	0	1	184
1	0	0	1	1	1	0	1	185
0	1	0	1	1	1	0	1	186
1	1	0	1	1	1	0	1	187
0	0	1	1	1	1	0	1	188
1	0	1	1	1	1	0	1	189
0	1	1	1	1	1	0	1	190
1	1	1	1	1	1	0	1	191

192~223 DIP address table										224~255 DIP address table								
1	**2**	**3**	**4**	**5**	**6**	**7**	**8**	**addr**		**1**	**2**	**3**	**4**	**5**	**6**	**7**	**8**	**addr**
0	0	0	0	0	0	1	1	192		0	0	0	0	0	1	1	1	224
1	0	0	0	0	0	1	1	193		1	0	0	0	0	1	1	1	225
0	1	0	0	0	0	1	1	194		0	1	0	0	0	1	1	1	226
1	1	0	0	0	0	1	1	195		1	1	0	0	0	1	1	1	227
0	0	1	0	0	0	1	1	196		0	0	1	0	0	1	1	1	228
1	0	1	0	0	0	1	1	197		1	0	1	0	0	1	1	1	229
0	1	1	0	0	0	1	1	198		0	1	1	0	0	1	1	1	230
1	1	1	0	0	0	1	1	199		1	1	1	0	0	1	1	1	231
0	0	0	1	0	0	1	1	200		0	0	0	1	0	1	1	1	232
1	0	0	1	0	0	1	1	201		1	0	0	1	0	1	1	1	233
0	1	0	1	0	0	1	1	202		0	1	0	1	0	1	1	1	234
1	1	0	1	0	0	1	1	203		1	1	0	1	0	1	1	1	235
0	0	1	1	0	0	1	1	204		0	0	1	1	0	1	1	1	236
1	0	1	1	0	0	1	1	205		1	0	1	1	0	1	1	1	237
0	1	1	1	0	0	1	1	206		0	1	1	1	0	1	1	1	238
1	1	1	1	0	0	1	1	207		1	1	1	1	0	1	1	1	239
0	0	0	0	1	0	1	1	208		0	0	0	0	1	1	1	1	240
1	0	0	0	1	0	1	1	209		1	0	0	0	1	1	1	1	241
0	1	0	0	1	0	1	1	210		0	1	0	0	1	1	1	1	242
1	1	0	0	1	0	1	1	211		1	1	0	0	1	1	1	1	243
0	0	1	0	1	0	1	1	212		0	0	1	0	1	1	1	1	244
1	0	1	0	1	0	1	1	213		1	0	1	0	1	1	1	1	245
0	1	1	0	1	0	1	1	214		0	1	1	0	1	1	1	1	246
1	1	1	0	1	0	1	1	215		1	1	1	0	1	1	1	1	247
0	0	0	1	1	0	1	1	216		0	0	0	1	1	1	1	1	248
1	0	0	1	1	0	1	1	217		1	0	0	1	1	1	1	1	249
0	1	0	1	1	0	1	1	218		0	1	0	1	1	1	1	1	250
1	1	0	1	1	0	1	1	219		1	1	0	1	1	1	1	1	251
0	0	1	1	1	0	1	1	220		0	0	1	1	1	1	1	1	252
1	0	1	1	1	0	1	1	221		1	0	1	1	1	1	1	1	253
0	1	1	1	1	0	1	1	222		0	1	1	1	1	1	1	1	254
1	1	1	1	1	0	1	1	223										

Attachment B Parameter of Air Conditioner (BACnet Protocol Version V1.0.0)

Equipment	Object type	Parameter name	Instance No.	Current value
IDU	Indoor ambient temperature	AI	(N-1)*256+131072	Actual value:-30~138;
	Temperature setting	AV	(N-1)*256+131072	Actual value:16.0~30.0;
	Lower limit temperature setting for cooling energy saving	AV	(N-1)*256+131073	Actual value:16.0~30.0;
	Lower limit temperature setting for heating energy saving	AV	(N-1)*256+131074	Actual value:16.0~30.0;
	Lower limit temperature setting for dehumidifying energy saving	AV	(N-1)*256+131075	Actual value:16.0~30.0;
	With IDU or not	BI	(N-1)*256+131072	0: No、1: Yes
	Other malfunctions	BI	(N-1)*256+131073	0: No、1: Yes
	Communication error between gateway and IDU	BI	(N-1)*256+131074	0: No、1: Yes
	IDU general error	BI	(N-1)*256+131075	0: No、1: Yes
	IDU protection	BI	(N-1)*256+131076	0: No、1: Yes
	Indoor fan protection	BI	(N-1)*256+131077	0: No、1: Yes
	Full water protection	BI	(N-1)*256+131078	0: No、1: Yes
	Power supply overload protection	BI	(N-1)*256+131079	0: No、1: Yes
	Anti freezing protection	BI	(N-1)*256+131080	0: No、1: Yes
	Mode conflict	BI	(N-1)*256+131081	0: No、1: Yes
	Malfunction of indoor circuit board	BI	(N-1)*256+131082	0: No、1: Yes
	IDU temperature sensor malfunction	BI	(N-1)*256+131083	0: No、1: Yes
	Ambient temperature sensor malfunction	BI	(N-1)*256+131084	0: No、1: Yes
	Inlet temperature sensor malfunction	BI	(N-1)*256+131085	0: No、1: Yes
	Outlet temperature sensor malfunction	BI	(N-1)*256+131086	0: No、1: Yes
	Humidity sensor malfunction	BI	(N-1)*256+131087	0: No、1: Yes
	Communication malfunction	BI	(N-1)*256+131088	0: No、1: Yes

	Engineering number conflict of IDU	BI	(N-1)*256+131089	0: No、1: Yes
	Missing main IDU	BI	(N-1)*256+131090	0: No、1: Yes
	One controller for multiple units, and the number of IDU is inconsistent (HBS)	BI	(N-1)*256+131091	0: No、1: Yes
	Main mode of IDU/subordinate mode of IDU	BI	(N-1)*256+131092	0: Slave IDU、1: Master IDU
	Auxiliary electrical heating of IDU	BI	(N-1)*256+131093	0: Off、1: On
	ON/OFF	BV	(N-1)*256+131072	0: Off、1: On
	Energy saving setting	BV	(N-1)*256+131073	0: Off、1: On
	Long distance shield energy saving function	BV	(N-1)*256+131074	0: No shield、1: Shield
	Long distance shield temperature setting function	BV	(N-1)*256+131075	0: No shield、1: Shield
	Long distance shield mode function	BV	(N-1)*256+131076	0: No shield、1: Shield
	Long distance shield on/off function	BV	(N-1)*256+131077	0: No shield、1: Shield
	Long distance lock function	BV	(N-1)*256+131078	0: Unlock、1: Lock
	IDU memory	BV	(N-1)*256+131079	0: Standby、1: Power-failure memory
	Give priority to IDU when supplying power	BV	(N-1)*256+131080	0: No、1: Yes
	8℃ heating function setting	BV	(N-1)*256+131081	0: Cancel 8℃ heating、 1: Start 8℃ heating
	Dry	BV	(N-1)*256+131082	0: Off、1: On
	Ventilation	BV	(N-1)*256+131083	0: Off、1: On
	Shield ON	BV	(N-1)*256+131084	0: No shield、1: Shield
	Shield OFF	BV	(N-1)*256+131085	0: No shield、1: Shield
	Shield timer	BV	(N-1)*256+131086	0: No shield、1: Shield
	Forbid opening auxiliary heating	BV	(N-1)*256+131087	0: Cancel low-temperature dehumidification、 1: Start low-temperature dehumidification
	Dehumidifying under low temperature	BV	(N-1)*256+131088	0: Auxiliary heating is allowable、 1: Auxiliary heating is not allowable
	Cancel filter cleaning remind	BV	(N-1)*256+131089	0: No、1: Yes
	All IDUs open	BO	(N-1)*256+131072	0: Invalid、1: All on

	All IDUs closed	BO	(N-1)*256+131073	0: All off; 1: Invalid
	The subordinated ODU No. of IDU	MI	(N-1)*256+131072	Actual value: 1~16
	Rated capacity of IDU	AI	(N-1)*256+131073	Actual value(KW): 2.2;2.5;2.8;3.2;3.6;4.0;4.5;5.0;5.6; 6.3;7.1;8.0;9.0;10.0;11.2;12.5;14.0;16.0;18.0;22.4;25.0;28.0;33.5;35.0;40.0;45.0;50.0;56.0;
	Gate control status	MI	(N-1)*256+131073	Actual value: 0:Invalid; 1:Without door control; 2: Card is inserted; 3:Card is disconnected
	Operation mode setting	MV	(N-1)*256+131072	Actual value: 0:Invalid; 1:Cooling; 2:Dehumidifying; 3:Fan; 4:Heating; 5:Auto; 6:Floor heating; 7:Rapid heating; 8:Heat supply
	Fan speed setting	MV	(N-1)*256+131073	Actual value: 0:Invalid; 1:Auto fan speed; 2:Low; 3:Medium-low; 4:Medium; 5:Medium-high;6:High; 7:Turbo
	Vertical swing	MV	(N-1)*256+131074	Range: 0~255; 0:Invalid; 1:Off; 2:15 swing; 3:1 position; 4:2 position; 5:3 position; 6:4 position; 7:5 position; 8:35 swing; 9:23 swing; 10:24 swing; 11:14 swing; 12:13 swing; others are reserved
	Horizontal swing	MV	(N-1)*256+131075	Range: 0~255; 0:Invalid; 1:Off; 2:Homodromous swing; 3:1 position; 4:2 position; 5:3 position; 6:4 position; 7:5 position; 13:15 position; 14:Opponent swing; others are reserved
	Quiet	MV	(N-1)*256+131076	Range: 0:Invalid data; 1:Quiet off; 2:Auto quiet;3:Quiet
	Sleep	MV	(N-1)*256+131077	Range: 0:Invalid data; 1:Sleep off; 2:Sleep 1; 3:Sleep 2; 4:Sleep 3
ODU	Outdoor ambient temperaturev	AI	(N-1)*256+262144	Actual value:-30~155
	Module 1 effective value of power grid side phase voltage	AI	(N-1)*256+262145	Actual value(V):0~510
	Module 1 PV DC bus voltage	AI	(N-1)*256+262146	Actual value(V):0~65535

	Module 1 power grid side current	AI	(N-1)*256+262147	Actual value(A)
	Module 1 power grid side grid connection power	AI	(N-1)*256+262148	Actual value(KW):-327.68~327.67
	Module 1 PV power	AI	(N-1)*256+262149	Actual value(KW):0~655.35
	Module 1 quantity of side grid connection	AI	(N-1)*256+262150	Actual value(KWH):-9.102~9.102
	Module 1 quantity of PV power generation	AI	(N-1)*256+262151	Actual value(KWH):0~18.204
	Module 1 PV side input current	AI	(N-1)*256+262152	Actual value(A)
	Module 2 effective value of power grid side phase voltage	AI	(N-1)*256+262153	Actual value(V):0~510
	Module 2 PV DC bus voltage	AI	(N-1)*256+262154	Actual value(V):0~65535
	Module 2 power grid side current	AI	(N-1)*256+262155	Actual value(A)
	Module 2 power grid side grid connection power	AI	(N-1)*256+262156	Actual value(KW):-327.68~327.67
	Module 2 PV power	AI	(N-1)*256+262157	Actual value(KW):0~655.35
	Module 2 quantity of side grid connection	AI	(N-1)*256+262158	Actual value(KWH):-9.102~9.102
	Module 2 quantity of PV power generation	AI	(N-1)*256+262159	Actual value(KWH):0~18.204
	Module 2 PV side input current	AI	(N-1)*256+262160	Actual value(A)
	Module 3 effective value of power grid side phase voltage	AI	(N-1)*256+262161	Actual value(V):0~510
	Module 3 PV DC bus voltage	AI	(N-1)*256+262162	Actual value(V):0~65535
	Module 3 power grid side current	AI	(N-1)*256+262163	Actual value(A)
	Module 3 power grid side grid connection power	AI	(N-1)*256+262164	Actual value(KW):-327.68~327.67
	Module 3 PV power	AI	(N-1)*256+262165	Actual value(KW):0~655.35
	Module 3 quantity of side grid connection	AI	(N-1)*256+262166	Actual value(KWH):-9.102~9.102
	Module 3 quantity of PV power generation	AI	(N-1)*256+262167	Actual value(KWH):0~18.204
	Module 3 PV side input current	AI	(N-1)*256+262168	Actual value(A)
	Module 4 effective value of power grid side phase voltage	AI	(N-1)*256+262169	Actual value(V):0~510
	Module 4 PV DC bus voltage	AI	(N-1)*256+262170	Actual value(V):0~65535
	Module 4 power grid side current	AI	(N-1)*256+262171	Actual value(A)

	Module 4 power grid side grid connection power	AI	(N-1)*256+262172	Actual value(KW):-327.68~327.67
	Module 4 PV power	AI	(N-1)*256+262173	Actual value(KW):0~655.35
	Module 4 quantity of side grid connection	AI	(N-1)*256+262174	Actual value(KWH):-9.102~9.102
	Module 4 quantity of PV power generation	AI	(N-1)*256+262175	Actual value(KWH):0~18.204
	Module 4 PV side input current	AI	(N-1)*256+262176	Actual value(A)
	Module 1 percentage setting for PV side limit power	AV	(N-1)*256+262144	Actual value(%)
	Module 2 percentage setting for PV side limit power	AV	(N-1)*256+262145	Actual value(%)
	Module 3 percentage setting for PV side limit power	AV	(N-1)*256+262146	Actual value(%)
	Module 4 percentage setting for PV side limit power	AV	(N-1)*256+262147	Actual value(%)
	Communication malfunction between gateway and ODU	BI	(N-1)*256+262144	0: No、1: Yes
	With ODU or not	BI	(N-1)*256+262145	0: No、1: Yes
	Other malfunctions	BI	(N-1)*256+262146	0: No、1: Yes
	Back flow protection for 4-way valve	BI	(N-1)*256+262147	0: No、1: Yes
	Pressure ratio is abnormal	BI	(N-1)*256+262148	0: No、1: Yes
	High pressure protection	BI	(N-1)*256+262149	0: No、1: Yes
	Low pressure protection	BI	(N-1)*256+262150	0: No、1: Yes
	High discharge temperature protection	BI	(N-1)*256+262151	0: No、1: Yes
	Overload protection	BI	(N-1)*256+262152	0: No、1: Yes
	Communication malfunction	BI	(N-1)*256+262153	0: No、1: Yes
	Outdoor ambient temperature sensor malfunction	BI	(N-1)*256+262154	0: No、1: Yes
	Discharge sensor fall-off malfunction	BI	(N-1)*256+262155	0: No、1: Yes
	High pressure sensor malfunction	BI	(N-1)*256+262156	0: No、1: Yes
	Low pressure sensor malfunction	BI	(N-1)*256+262157	0: No、1: Yes
	Discharge sensor malfunction	BI	(N-1)*256+262158	0: No、1: Yes

	Capacity match abnormal	BI	(N-1)*256+262159	0: No、1: Yes
	Defrosting sensor malfunction	BI	(N-1)*256+262160	0: No、1: Yes
	Subcooler sensor malfunction	BI	(N-1)*256+262161	0: No、1: Yes
	Vapour separator sensor malfunction	BI	(N-1)*256+262162	0: No、1: Yes
	Fan drive board malfunction	BI	(N-1)*256+262163	0: No、1: Yes
	Compressor drive board malfunction	BI	(N-1)*256+262164	0: No、1: Yes
	Compressor drive board working abnormal	BI	(N-1)*256+262165	0: No、1: Yes
	Voltage protection for compressor drive board power	BI	(N-1)*256+262166	0: No、1: Yes
	Fan drive board working abnormal	BI	(N-1)*256+262167	0: No、1: Yes
	Voltage protection for fan drive board power	BI	(N-1)*256+262168	0: No、1: Yes
	Module 1 malfunction	BI	(N-1)*256+262169	0: No、1: Yes
	Module 2 malfunction	BI	(N-1)*256+262170	0: No、1: Yes
	Module 3 malfunction	BI	(N-1)*256+262171	0: No、1: Yes
	Module 4 malfunction	BI	(N-1)*256+262172	0: No、1: Yes
	High pressure over low protection	BI	(N-1)*256+262173	0: No、1: Yes
	Unrecoverable malfunction in ODU system	BI	(N-1)*256+262174	0: No、1: Yes
	Recoverable malfunction in ODU system	BI	(N-1)*256+262175	0: No、1: Yes
	Discharge temperature over low protection	BI	(N-1)*256+262176	0: No、1: Yes
	Pressure sensor malfunction	BI	(N-1)*256+262177	0: No、1: Yes
	General malfunction of ODU	BI	(N-1)*256+262178	0: No、1: Yes
	Compressor operation status	BI	(N-1)*256+262179	0: Off、1: On
	Unit debugging status	BI	(N-1)*256+262180	0: Normal、1: Debug
	Start electricity VIP mode	BI	(N-1)*256+262181	0: No、1: Yes
	Module 1 side grid connection status ON/OFF of power grid	BI	(N-1)*256+262182	0: Off、1: On
	Module 1 MPPT ON/OFF status	BI	(N-1)*256+262183	0: Off、1: On
	Module 1 percentage setting for PV side limit	BI	(N-1)*256+262184	0: Normal、1: Limit frequency

	power			
	Module 1 mark of electric quantity statistics	BI	(N-1)*256+262185	0: Power calculation is not done、 1: Power calculation is done
	Module 2 side grid connection status ON/OFF of power grid	BI	(N-1)*256+262186	0: Off、1: On
	Module 2 MPPT ON/OFF status	BI	(N-1)*256+262187	0: Off、1: On
	Module 2 percentage setting for PV side limit power	BI	(N-1)*256+262188	0: Normal、1: Limit frequency
	Module 2 mark of electric quantity statistics	BI	(N-1)*256+262189	0: Power calculation is not done、 1: Power calculation is done
	Module 3 side grid connection status ON/OFF of power grid	BI	(N-1)*256+262190	0: Off、1: On
	Module 3 MPPT ON/OFF status	BI	(N-1)*256+262191	0: Off、1: On
	Module 3 percentage setting for PV side limit power	BI	(N-1)*256+262192	0: Normal、1: Limit frequency
	Module 3 mark of electric quantity statistics	BI	(N-1)*256+262193	0: Power calculation is not done、 1: Power calculation is done
	Module 4 side grid connection status ON/OFF of power grid	BI	(N-1)*256+262194	0: Off、1: On
	Module 4 MPPT ON/OFF status	BI	(N-1)*256+262195	0: Off、1: On
	Module 4 percentage setting for PV side limit power	BI	(N-1)*256+262196	0: Normal、1: Limit frequency
	Module 4 mark of electric quantity statistics	BI	(N-1)*256+262197	0: Power calculation is not done、 1: Power calculation is done
	ODU remote control emergency stop	BV	(N-1)*256+262144	0: No、1: Yes. **Note：** apply to CAN2 only
	Remote energy saving mark	BV	(N-1)*256+262145	0: Off、1: On. **Note：** apply to CAN2 only
	Cooling/heating mode of the whole unit	MI	(N-1)*256+262144	Actual value: 0:Invalid; 1:Cooling only; 2:Heating 3:Cooling and heating; 4:Fan
	Emergency operation mode	MI	(N-1)*256+262145	Actual value: 1:No emergency operation; 2:Emergency operation of compressor; 3:Emergency operation of fan; 4:Emergency operation of module
	Upper limit setting of ODU capacity	MV	(N-1)*256+262144	Actual value(%):30~100. **Note：** apply to CAN2 only
IO	DI point 1 (fire signal)	BI	393216	0: Off、1: On. **Note ：** CAN2 remote control emergency stop，CAN1 to shut down all IDUs

	DI point 2	BI	393217	0: Off、1: On
	DI point 3	BI	393218	0: Off、1: On
	DI point 4	BI	393219	0: Off、1: On
	DI point 5	BI	393220	0: Off、1: On
	D0 point 1	BV	393216	0: Off、1: On
	D0 point 2	BV	393217	0: Off、1: On
	D0 point 3	BV	393218	0: Off、1: On
	D0 point 4	BV	393219	0: Off、1: On
	D0 point 5	BV	393220	0: Off、1: On

Note: engineering number N of indoor unit is 1~255, engineering number N of outdoor unit (module) is 1~16.

Attachment C TCP/IP Setting

This text takes Windows 7 as example to demonstrate the setting of TCP/IP.

(1) Set the network connection attribute of local computer.

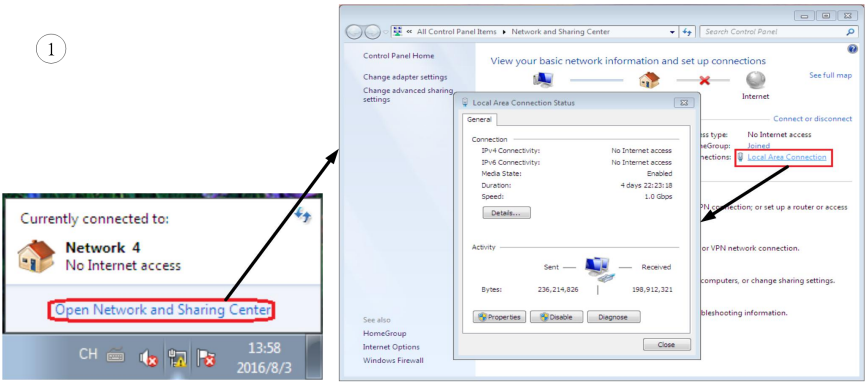

(2) Select the option of Internet protocol (TCP/IP).

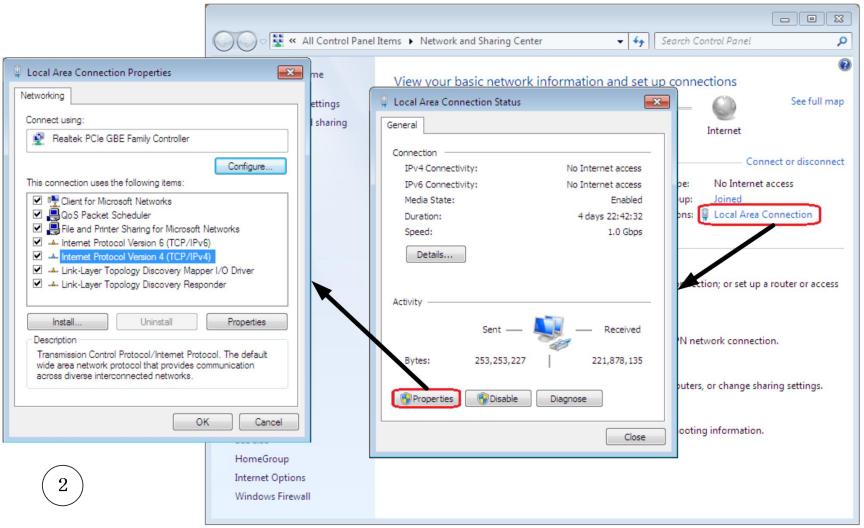

(3) Set the TCP/IP attribute as shown in the picture (address of network equipment for connecting gateway must be the same as the network address of gateway).

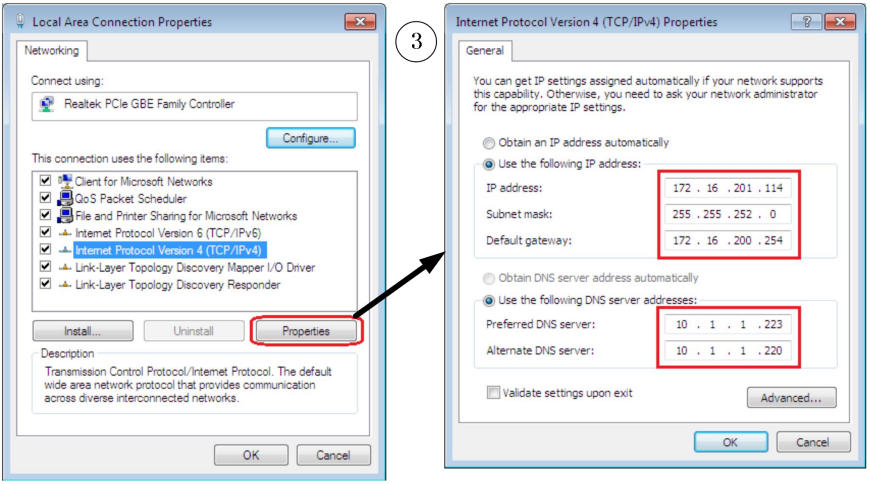

(4) There is no need to set the DNS server separately, you can keep the default setting.

(5) Click “Confirm”, the setting is done.

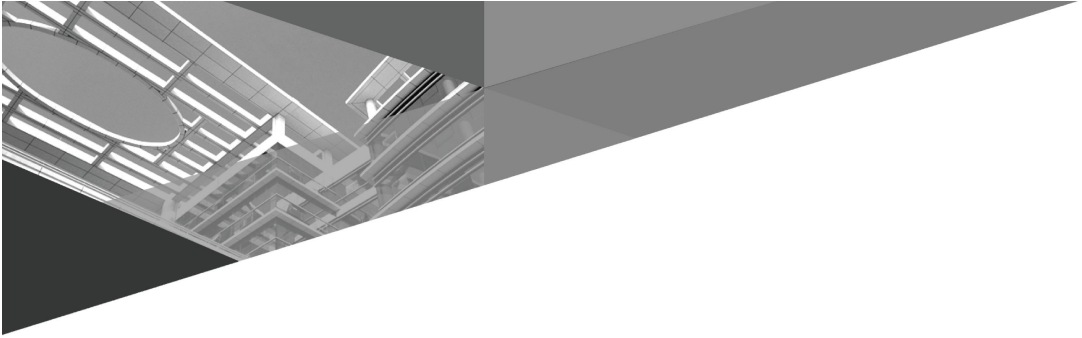

GREE ELECTRIC APPLIANCES, INC. OF ZHUHAI

Add: West Jinji Rd, Qianshan, Zhuhai,Guangdong, China, 519070
Tel: (+86-756) 8522218
Fax: (+86-756) 8669426
E-mail: gree@gree.com.cn www.gree.com

600005060413